# REC R2/R3 SERIES

## FEATURES

- DIP and SMD type
- Diode version are available for customer's selection
- UL approved
- Using at security system,modem and other telecommunication products

UL FILE NO. : E510886
CUL FILE NO. : E510886

## ORDERING INFORMATION

R2 — D 1A 05

1 2 3 4

1. Type
   - R2 : DIP Type
   - R3 : SMD Type
2. Function
   - Nil : Standard Type
   - D : With Diode Type
   - H : High Insulation
3. Contact Arrangement
   - 1A : 1 Form A(SPST-NO)
   - 1B : 1 Form B(SPSTNC)
   - 1C : 1 Form C(SPDT)
   - 2A : 2 Form A(2PST-NO)
4. Coil Nominal Voltage

## COIL DATA

| Contact form | Nominal Voltage(VDC) | Max. Operate Voltage(VDC) | Pull -in Voltage(VDC) | Dropout Voltage(VDC) | Coil ±10% Resistance(Ω) | Nominal input power(mW) |
|---|---|---|---|---|---|---|
| 1A | 5 | 16 | 3.75 | 0.8 | 500 | 50 |
| | 12 | 20 | 9.00 | 1.0 | 1000 | 144 |
| | 24 | 32 | 18.00 | 2.0 | 2150 | 268 |
| 2A | 5 | 11 | 3.75 | 0.8 | 140 | 179 |
| | 12 | 20 | 9.00 | 1.0 | 500 | 288 |
| | 24 | 32 | 18.00 | 2.0 | 2150 | 268 |
| 1B | 5 | 6 | 4.20 | 0.6 | 500 | 50 |
| | 12 | 14.5 | 9.00 | 1.0 | 1000 | 144 |
| | 24 | 29 | 18.00 | 2.0 | 2150 | 268 |
| 1C | 5 | 11 | 3.75 | 0.8 | 200 | 125 |
| | 12 | 20 | 9.00 | 1.0 | 500 | 288 |
| | 24 | 32 | 18.00 | 2.0 | 2150 | 268 |

## CONTACT RATING

| | | | | |
|---|---|---|---|---|
| 1PST-NO / 1PST-NC<br>2PST-NO | Switch Current | | 0.5ADC Max. | |
| | Carry Current | | 1.0ADC Max. | |
| 1PDT | Switch Current | 0.2ADC MAX. | Carry Current | 0.5ADC Max. |

## DIMENSIONS:±0.2mm

DIP TYPE

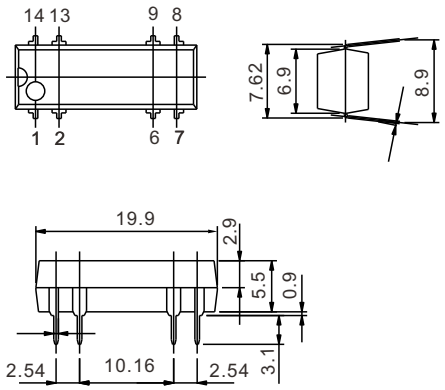


SMD TYPE

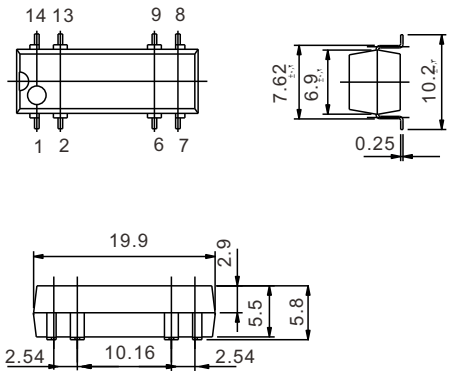


P.C.B LAYOUT

DIP TYPE

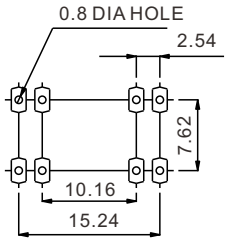


SMD TYPE

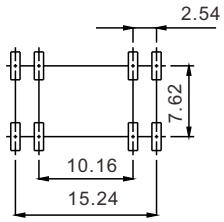


WRING DIAGRAM

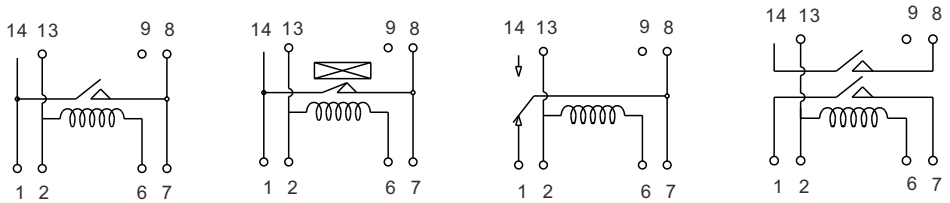


## GENERAL DATA

| | |
|---|---|
| Insulation Resistance | 1,000 MΩ Min. (DC 100V) |
| Dielectric Strength | 250 VDC between contact. |
| | 1,400 VDC between all elements. |
| Contact Material | Silver- Cadmium Oxide as standard. |
| Contact Resistance | 150 mΩ max. ( initial value ) |
| Switching Power | 1A, 2A, 1B : 10VA Max., 1C : 3VA Max. |
| Carry Current | 1A, 2A, 1B : 1.0ADC Max., 1C : 0.5ADC Max. |
| Switching Power | 1A, 2A, 1B : 10VA Max. 1C : 3VA Max. |
| Operation Time | 1.0 ms max. |
| Release Time | 0.5 ms max. |
| Temperature Range | - 40°C ~ + 85°C |
| Expected Life | With operation rate 30/min.<br>Mechanical - 10,000,000 operations min.<br>Electrical - 100,000 operations min. at rated load. |
| Weight | 1.4 grams |